GSGH-200 Antistatic & Antibacterial Handle

Features

- Elastomer coating provides static eliminating and antibacterial effect
- Designed to reduce discomfort caused by static when touching a metal handle
- Textured, soft handle surface improves grip in manufacturing environments where lubricants are used
- Suitable for applications including medical and pharmaceutical equipment, semiconductor manufacturing equipment, etc.

Notes

- Operating temperature: -30℃ ~ 80℃
- Install to a conductive surface to eliminate static. Non-conductive surface has no static eliminating effect. Discharge by grounding is required

Parts Included

- Pan head screw with spring washer M6×20 (SUS)

Pathway of Releasing Electrical Discharge

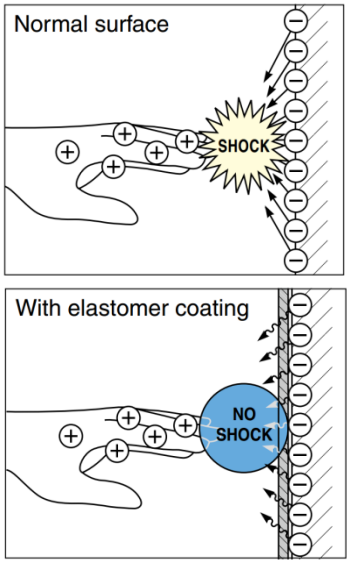

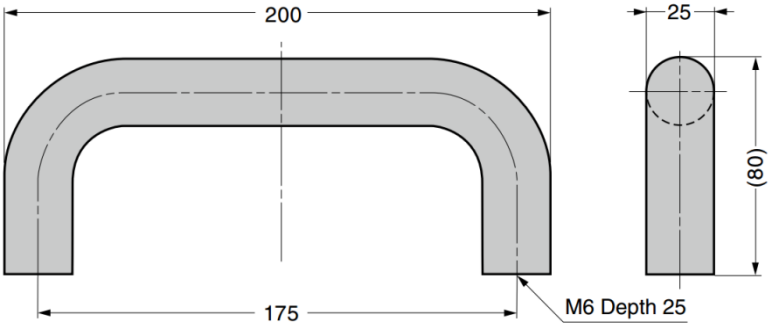

Properties of Special Elastomer Coating

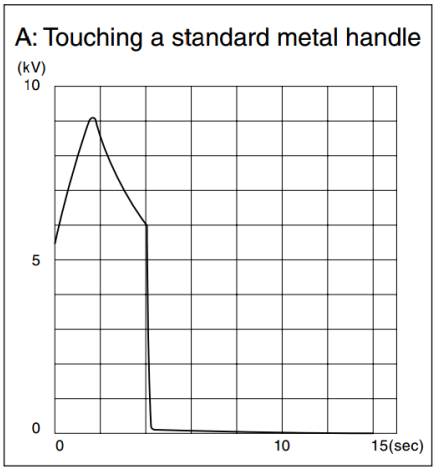

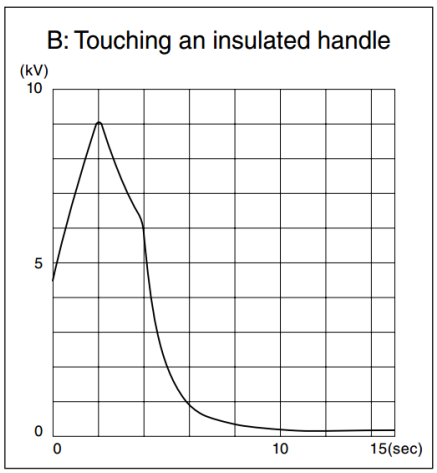

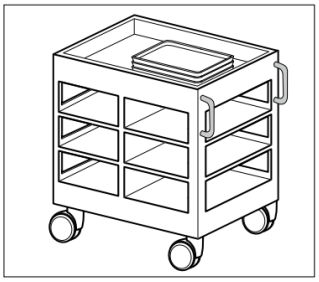

Part No.	Material	Colour
GSGH-200	PA, Elastomer Coating	Blue